CAN YOU SEE THE AIRPLANES? THE ADJACENT SAMPLES SHOW THREE DIFFERENT LEVELS OF SHADING. SETTINGS FOR VIEWING AND PRINTING DRAWING CONTENT ARE OPTIMIZED WHEN ALL THREE PLANES ARE VISIBLE. THIS GUIDANCE IS PROVIDED FOR REFERENCE ONLY.

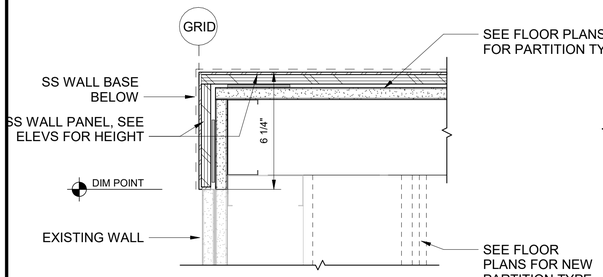

1 PLAN - ALL-GLASS STOREFRONT JAMB AT SS PANEL
SCALE: 3" = 1'-0"

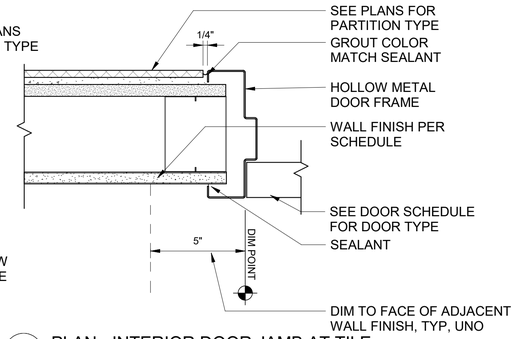

2 PLAN - INTERIOR DOOR JAMB AT TILE
SCALE: 3" = 1'-0"

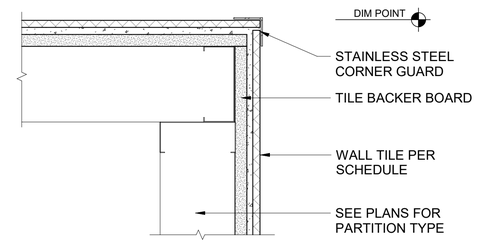

3 PLAN - CORNER GUARD AT TILE
SCALE: 3" = 1'-0"

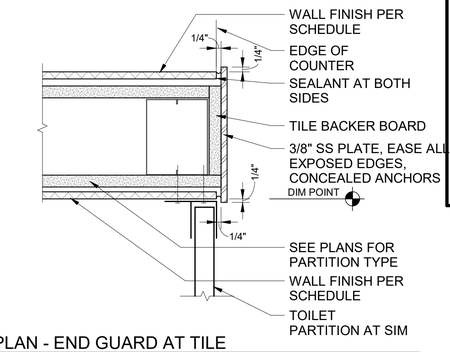

4 PLAN - END GUARD AT TILE
SCALE: 3" = 1'-0"

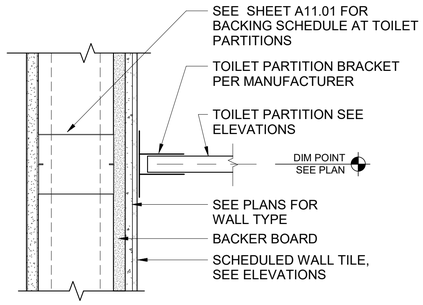

5 PLAN - TILE AT TOILET PARTITION
SCALE: 3" = 1'-0"

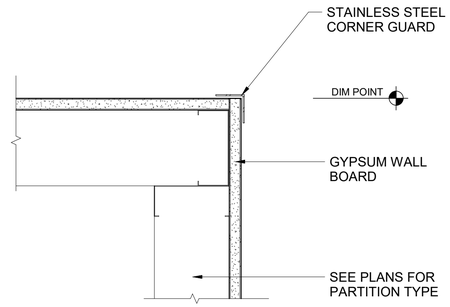

6 PLAN - CORNER GUARD AT GYP BD WALL
SCALE: 3" = 1'-0"

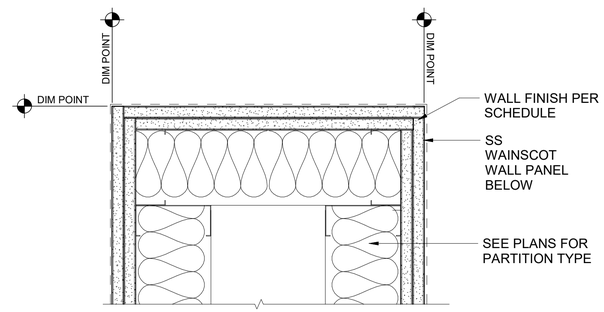

7 PLAN - OUTSIDE CORNER AT GYP COLUMN
SCALE: 3" = 1'-0"

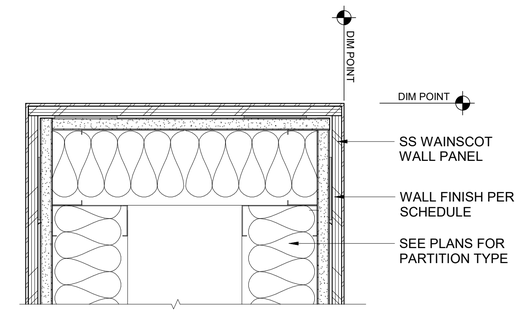

8 PLAN - OUTSIDE CORNER AT METAL PANEL WAINSCOT
SCALE: 3" = 1'-0"

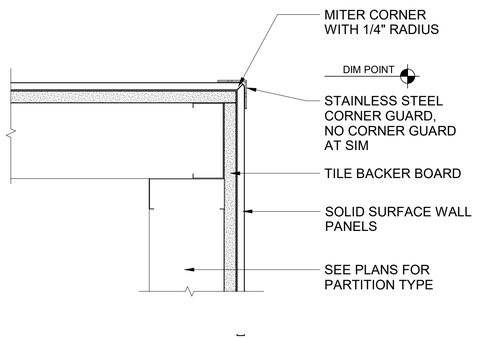

9 PLAN - CORNER GUARD AT SOLID SURFACE
SCALE: 3" = 1'-0"

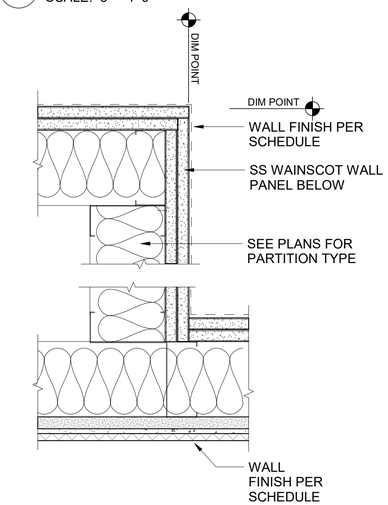

10 PLAN - OUTSIDE CORNER AT GYP WALL
SCALE: 3" = 1'-0"

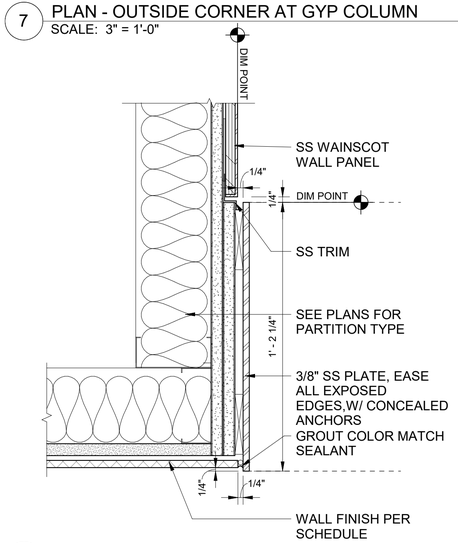

11 PLAN - SS JAMB AT TILE
SCALE: 3" = 1'-0"

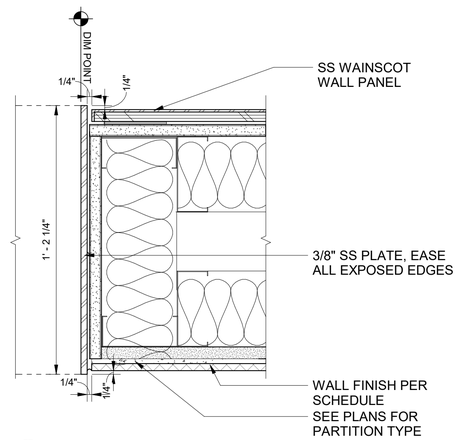

12 PLAN - SS JAMB
SCALE: 3" = 1'-0"

NO.	DATE	BY	REVISIONS	APP

NO.	DATE	BY	REVISIONS	APP

Port of Portland

mwa architects

2025D031 DESIGN NUMBER

103101 PROJECT NUMBER

REGISTERED ARCHITECT JEAN VON BARGEN ROOT PORTLAND, OR 4830 STATE OF OREGON

PORTLAND INTERNATIONAL AIRPORT

TERMINAL RESTROOM REHABILITATION 2026

DETAILS - PLAN 1

SUBMITTED BY	BRIAN FRANCIS
DESIGNED BY	A. COOK
DRAWN BY	M. PHILLIPS
CHECKED BY	J. ROOT
DATE	JULY 2026
SHEET NO.	45 TYPE CD
DRAWING NO.	PDX 2026-510
DISC. SHT. NO.	A11.03

DRAWING SCALE IS REDUCED 50% WHEN SHEET SIZE IS 11" x 17". GRAPHIC SCALE-FOR REFERENCE ONLY