CAN YOU SEE THE AIRPLANES? THE ADJACENT SAMPLES SHOW THREE DIFFERENT LEVELS OF SHADING. SETTINGS FOR VIEWING AND PRINTING DRAWING CONTENT ARE OPTIMIZED WHEN ALL THREE PLANES ARE VISIBLE. THIS GUIDANCE IS PROVIDED FOR REFERENCE ONLY.

light gray dark gray black

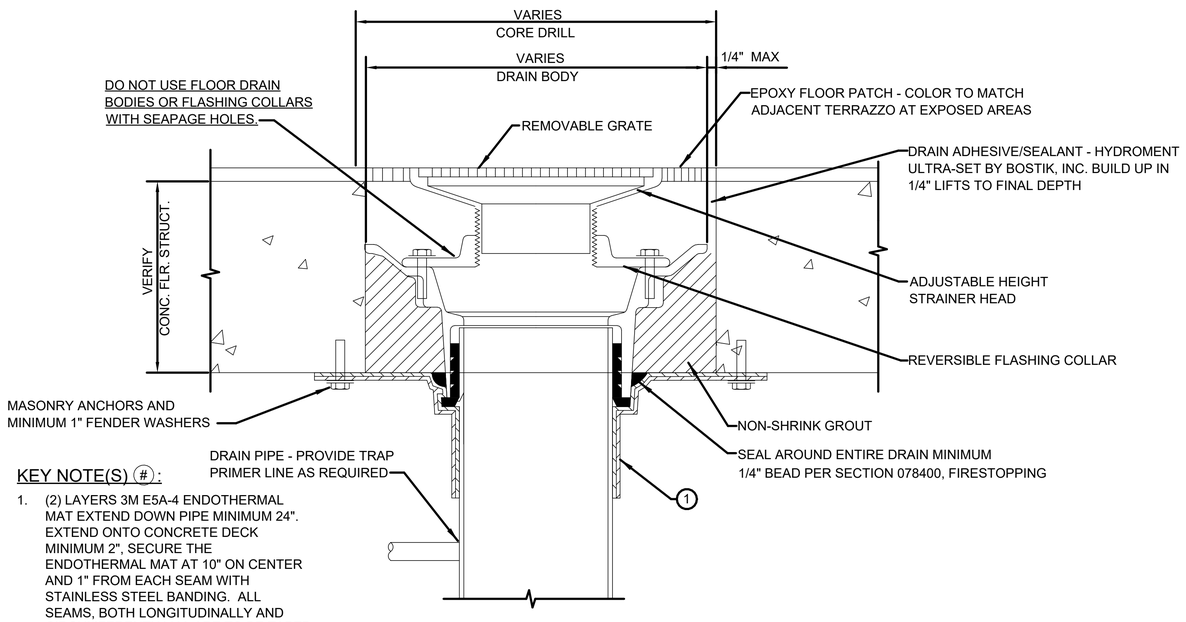

KEY NOTE(S) #:

1. (2) LAYERS 3M E5A-4 ENDOTHERMAL MAT EXTEND DOWN PIPE MINIMUM 24". EXTEND ONTO CONCRETE DECK MINIMUM 2", SECURE THE ENDOTHERMAL MAT AT 10" ON CENTER AND 1" FROM EACH SEAM WITH STAINLESS STEEL BANDING. ALL SEAMS, BOTH LONGITUDINALLY AND CIRCUMFERENTIALLY, ARE TO BE TAPED WITH 3M T-49 TAPE.

2 FLOOR DRAIN DETAIL
SCALE: N.T.S.

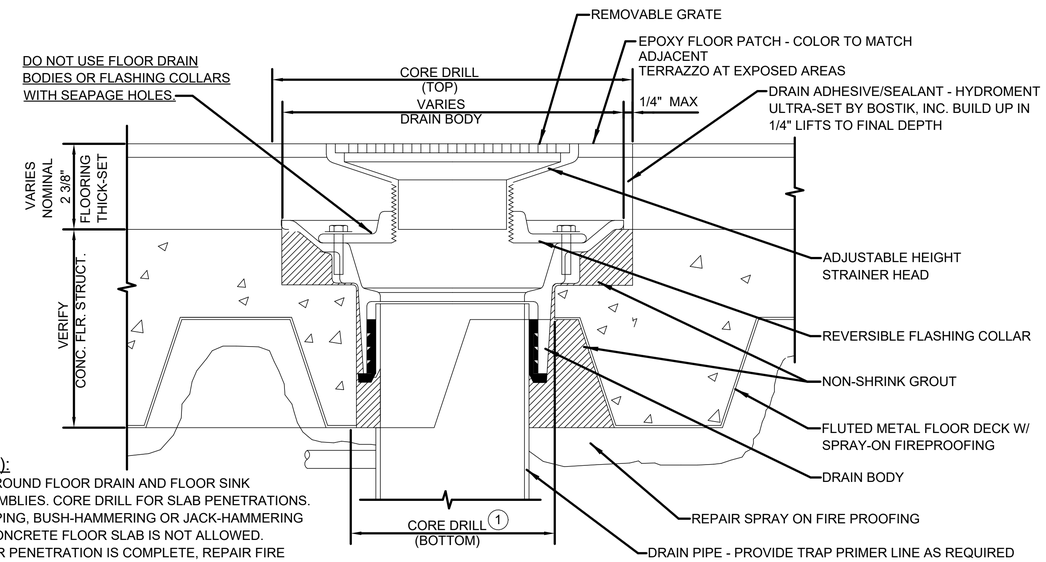

NOTE(S):

1. USE ROUND FLOOR DRAIN AND FLOOR SINK ASSEMBLIES. CORE DRILL FOR SLAB PENETRATIONS. CHIPPING, BUSH-HAMMERING OR JACK-HAMMERING OF CONCRETE FLOOR SLAB IS NOT ALLOWED.
2. AFTER PENETRATION IS COMPLETE, REPAIR FIRE PROOFING AT UNDERSIDE OF METAL FLOOR DECK.
3. FLOOR SINKS AT OTHER FLOOR FINISHES AND SUB FLOORING SIMILAR.

1 FLOOR DRAIN DETAIL (THICK-SET FLOORING)
SCALE: N.T.S.

NO.	DATE	BY	REVISIONS	APP

NO.	DATE	BY	REVISIONS	APP

Port of Portland

mwa architects

PAE pae-engineers.com
151 SW 1st Avenue #300 Portland, OR 97204
503.226.2921 pae-engineers.com

2025D031 DESIGN NUMBER
103101 PROJECT NUMBER

REGISTERED PROFESSIONAL ENGINEER 82382PE OREGON DECEMBER 14, 2014 TRAVIS J. LEWIS
07/14/2026
EXPIRES: 12/31/2026

PORTLAND INTERNATIONAL AIRPORT
TERMINAL RESTROOM REHABILITATION 2026
DETAILS - PLUMBING

SUBMITTED BY	BRIAN FRANCIS
DESIGNED BY	E. WALCZYK
DRAWN BY	C. RICHARDS
CHECKED BY	T. LEWIS
DATE	JULY 2026
SHEET NO.	98
TYPE	CD
DRAWING NO.	PDX 2026-510
DISC. SHT. NO.	P5.03

DRAWING SCALE IS REDUCED 50% WHEN SHEET SIZE IS 11" x 17". 0 1/4" 1/2" 1" 2" GRAPHIC SCALE-FOR REFERENCE ONLY