CAN YOU SEE THE APPLIANCE? THE ADJACENT SAMPLES SHOW THREE DIFFERENT LEVELS OF SHADING. SETTINGS FOR VIEWING AND PRINTING DRAWING CONTENT ARE OPTIMIZED WHEN ALL THREE PLANES ARE VISIBLE. THIS GUIDANCE IS PROVIDED FOR REFERENCE ONLY.

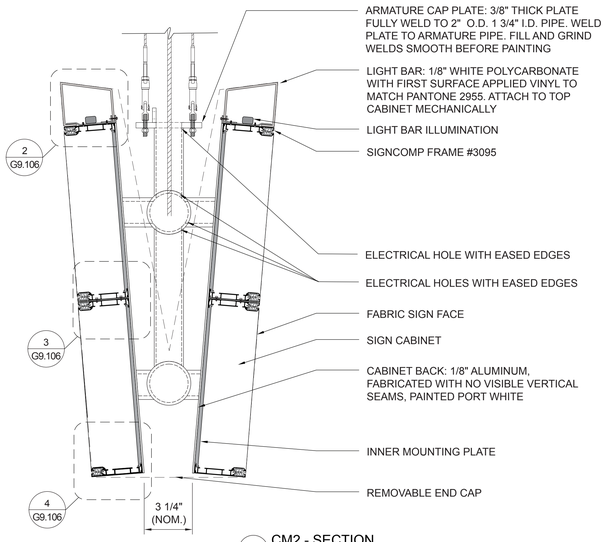

1 CM2 - SECTION
SCALE: 3" = 1' - 0"

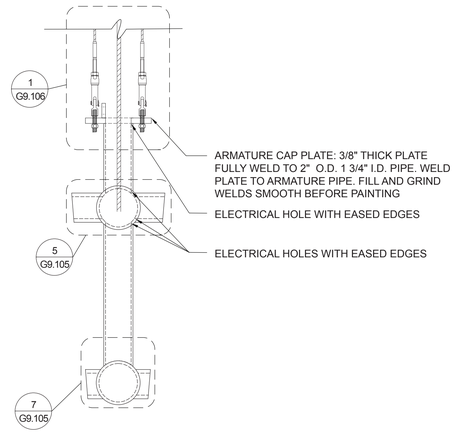

2 CM2 - ARMATURE SECTION
SCALE: 3" = 1"

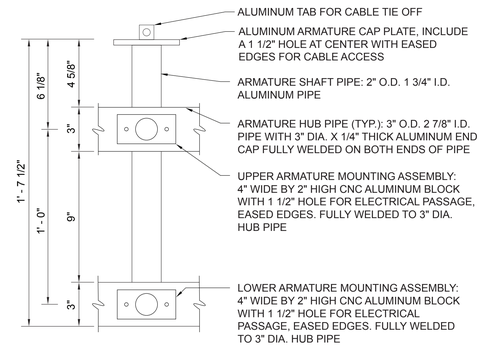

3 CM2 - ARMATURE ELEVATION
SCALE: 3" = 1'

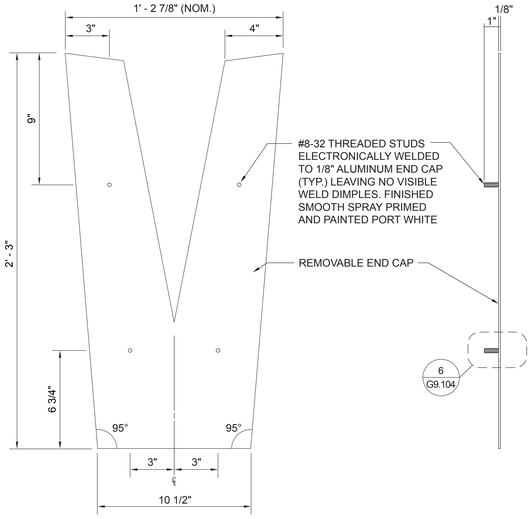

4 CM2 - END CAP ELEVATION
SCALE: 3" = 1' - 0"

5 CM2 - END CAP SECTION
SCALE: 3" = 1' - 0"

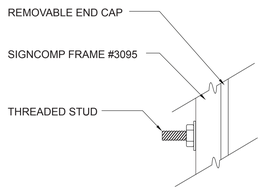

6 CM2 - THREADED STUD DETAIL
SCALE: FULL SIZE

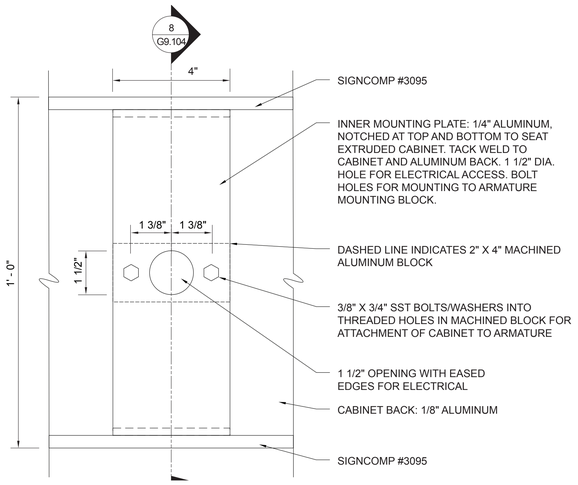

7 CM2 - INNER MOUNTING PLATE LARGE - ELEVATION
SCALE: HALF SCALE

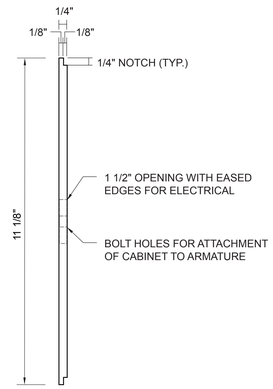

8 CM2 - INNER MOUNTING PLATE LARGE - SECTION
SCALE: HALF SCALE

DRAWING SCALE IS REDUCED 50% WHEN SHEET SIZE IS 17" x 22".
0" 1" 2"
GRAPHIC SCALE FOR REFERENCE ONLY

NO.	DATE	BY	REVISIONS	APP

NO.	DATE	BY	REVISIONS	APP

Port of Portland

dbc architecture
2505 se 11th ave #328
portland, or 97202
503.504.1230
dbcarchitecture.com

Mayer/Reed
Mayer/Reed, Inc.
920 SW 6th Ave, Ste 425
Portland, Oregon 97204
503.223.5953

2026D004 EAN
103101 PAN

REGISTERED LANDSCAPE ARCHITECT 400 CRAIG SHANE OREGON

PORTLAND INTERNATIONAL AIRPORT
TERMINAL AND CONCOURSES WAYFINDING SIGNAGE
SIGN DETAILS 4

SUBMITTED BY	JAY OSTLUND
DESIGNED BY	B. STEVENS
DRAWN BY	B. STEVENS
CHECKED BY	K. FRY
DATE	AUGUST 2026
SHEET NO.	209
TYPE	CD
DRAWING NO.	PDX 2026-512
DISC. SHT. NO.	G9.104

IF ELECTRONIC SIGNATURE IS BROKEN OR MISSING - THIS IS NOT A LEGAL DRAWING

DRAWING SCALE IS REDUCED 50% WHEN SHEET SIZE IS 17" x 22".