CAN YOU SEE THE APPLANES? THE ADJACENT SAMPLES SHOW THREE DIFFERENT LEVELS OF SHADING. SETTINGS FOR VIEWING AND PRINTING DRAWING CONTENT ARE OPTIMIZED WHEN ALL THREE PLANES ARE VISIBLE. THIS GUIDANCE IS PROVIDED FOR REFERENCE ONLY.

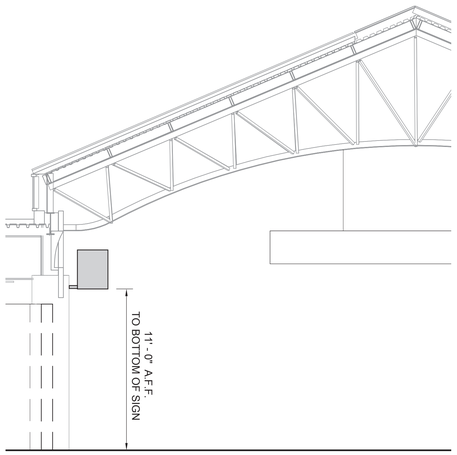

1 FM3 - MOUNTING CONDITION
SCALE: 1/4" = 1' - 0"

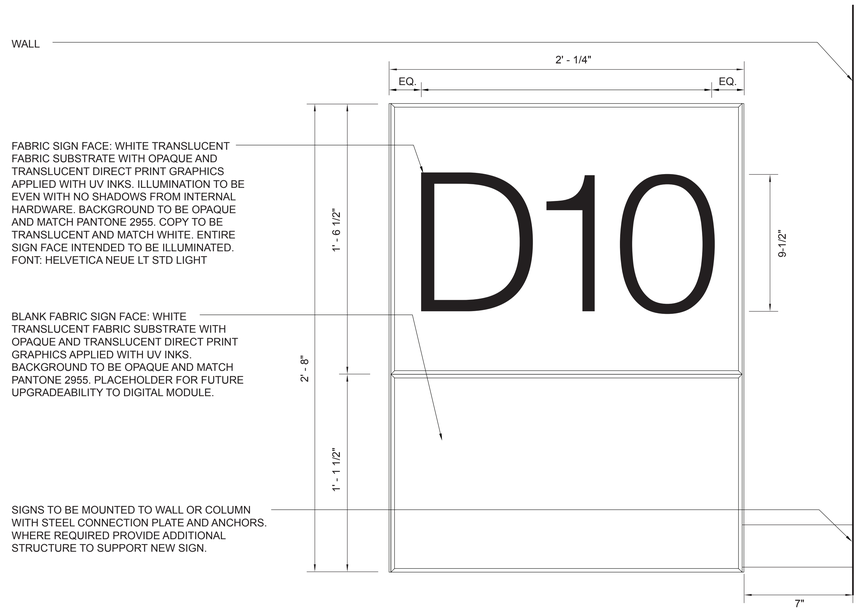

2 FM3 - ELEVATION
SCALE: 3" = 1' - 0"

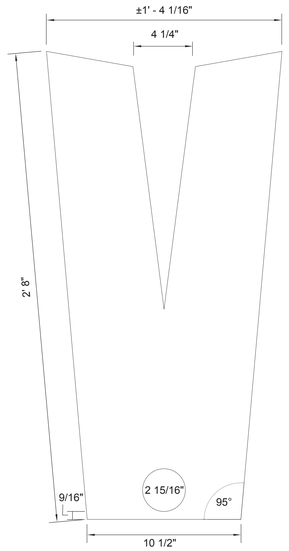

3 FM3 - END CAP ELEVATION
SCALE: 3" = 1' - 0"

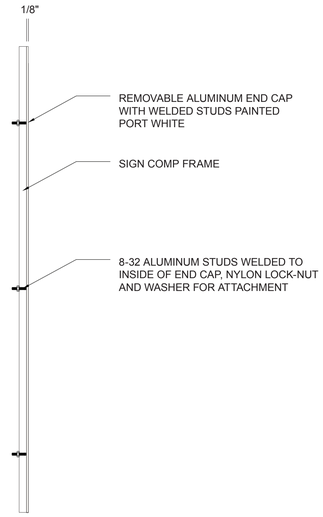

4 FM3 - END CAP SECTION
SCALE: 3" = 1' - 0"

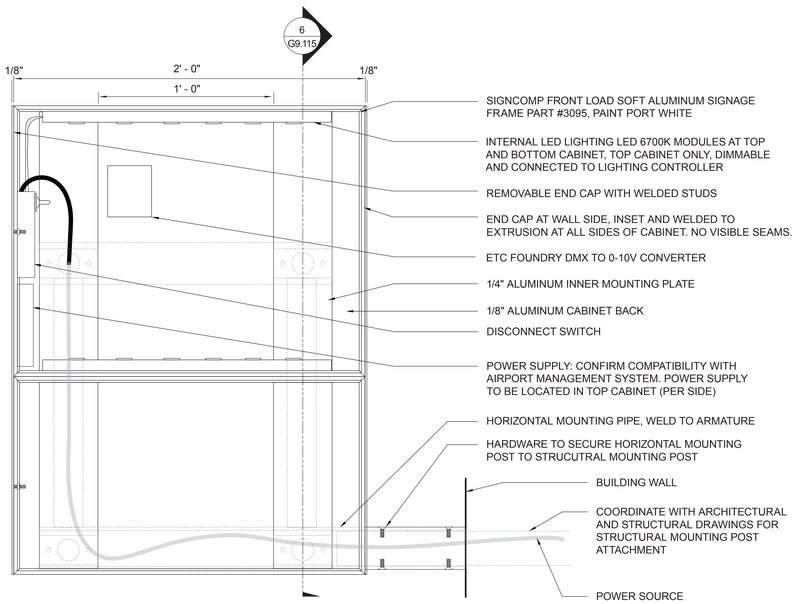

5 FM3 - ELEVATION
SCALE: 3" = 1' - 0"

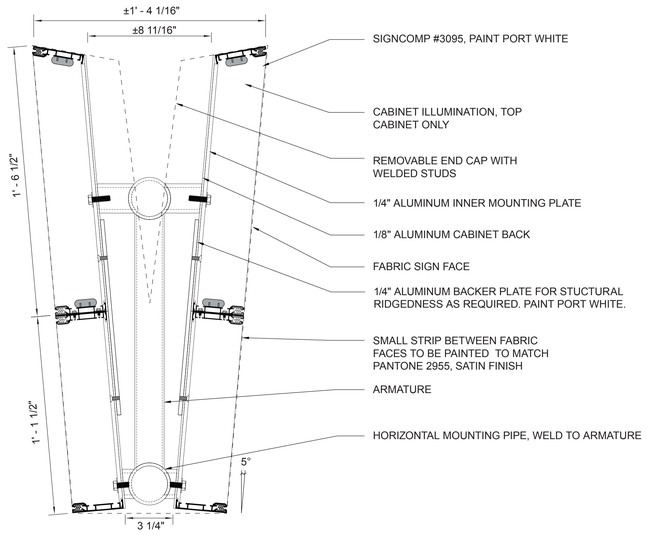

6 FM3 - SECTION
SCALE: 3" = 1' - 0"

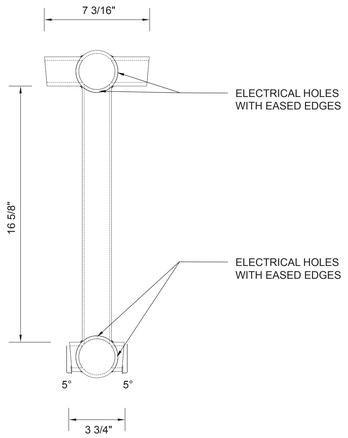

7 FM3 - ARMATURE SECTION
SCALE: 3" = 1"

NO.	DATE	BY	REVISIONS	APP

NO.	DATE	BY	REVISIONS	APP

Port of Portland

dbc architecture
2505 se 11th ave #328 portland, or 97202
503.504.1230 dbcarchitecture.com

Mayer/Reed
Mayer/Reed, Inc.
920 SW 6th Ave, Ste 425
Portland, Oregon 97204
503.223.5953

2026D004 EAN
103101 PAN

REGISTERED LANDSCAPE ARCHITECT 400 JERAME SHANE OREGON

PORTLAND INTERNATIONAL AIRPORT
TERMINAL AND CONCOURSES WAYFINDING SIGNAGE
SIGN DETAILS 15

SUBMITTED BY	JAY OSTLUND
DESIGNED BY	B. STEVENS
DRAWN BY	B. STEVENS
CHECKED BY	K. FRY
DATE	AUGUST 2026
SHEET NO.	220
TYPE	CD
DRAWING NO.	PDX 2026-512
DISC. SHT. NO.	G9.115

DRAWING SCALE IS REDUCED 50% WHEN SHEET SIZE IS 17" x 22"
1" 2"
DRAWING SCALE FOR REFERENCE ONLY